Kimberlites: Mantle Expressions of Deep-Seated Subduction

T.E. McCANDLESS

Center for Mineral Resources, Department of Geosciences, University of Arizona, Tucson, Arizona 85721, USA

ABSTRACT

Kimberlites have historically been considered the product of anorogenic magmatism, because their intraplate positioning was far removed from the expected reach of subducted oceanic lithosphere. Geophysical and geochemical evidence now indicates that subducted oceanic lithosphere extends far beneath continental lithosphere, and can contain the volatiles necessary for initiating deep-mantle magmatism. It is proposed that spatial-temporal trends in kimberlite magmatism in southern Africa and in North America can be correlated with reductions in plate convergence over the last ~200 Myr.

1. INTRODUCTION

With the general acceptance of the Plate Tectonic Theory over 25 years ago, most igneous rock assemblages were recognised to characterise some aspect of either rifting, subduction, or hot spot activity (e.g. MORB, OIB). Kimberlites (and related rocks), though significant as primary sources of diamond and mantle-derived xenoliths, are positioned far inland from plate margins, and were generally excluded from tectonic interpretation. Sharp (1974) was likely the first to propose that kimberlites were related to subduction; an idea that has been further developed by Helmstaedt and Gurney (1984, 1997). However, three problems have prevented any clear correlation being drawn between kimberlite activity and plate tectonics: (1) The lack of accurate dates for kimberlite magmatism made it difficult to recognize any spatial-temporal trends that could be correlated with plate motion; (2) thermal modeling suggested that subducted oceanic lithosphere lost its physical integrity within a few hundred kilometers from the trench, being absorbed into the mantle (Toksöz, 1975); and (3) it was considered improbable that fluids could be carried deep enough into the mantle to explain kimberlite magmatism.

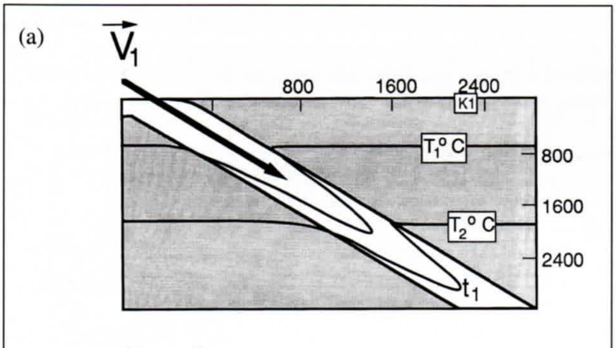

Figure 1. Depression of isotherms into a descending slab, modified from Toksöz (1975). **(a)** At constant velocity (V_1), isotherms (T_1, T_2) remain depressed in the descending slab, and kimberlites (K1) are produced at the depth where trapped volatiles are released. **(b)** A reduction in convergence velocity ($V_2 < V_1$) allows isotherms to migrate up the descending slab, triggering a migration of kimberlite magmatism from right to left (K2, K3).

These concerns can now be addressed in the following manner: (1) An abundance of dates for kimberlite fields in southern Africa and North America now allow for temporal patterns to be recognised (Skinner, 1989; Gurney *et al.,* 1991; Helmstaedt and Gurney, 1997; McCandless, 1997). (2) Seismic imaging of the Farallon Plate beneath North America has revealed that subducted oceanic lithosphere is still present, over two thousand kilometers beneath continental lithosphere (Grand *et al.,* 1997). (3) Experimental and physical evidence suggests that fluids can be carried deep into the mantle in dense hydrous silicates (Staudigel and King, 1992; Peacock, 1993; Schmidt and Stefano, 1994; Bose and Ganguly, 1995), and could explain the presence of fluids in diamonds (Navon *et al.,* 1988; Schrauder and Navon, 1994). The purpose of this paper is to present a tectonic-thermal model that explains the spatial-temporal patterns of kimberlitic magmatism over a period of earth history when relative plate motions are best known, i.e. from ~200 Ma to present.

2. THERMAL MODELING OF A SUBDUCTING SLAB

Toksöz (1975) recognized that depressed heat flow above convergent margins must be due to the subduction of cold oceanic lithosphere into the warm mantle, and produced a model to demonstrate the thermal and chemical changes. Based on seismic tomography data (Grand *et al.,* 1997), the model is modified by extending the slab several hundred kilometers inland and below the continental lithosphere. At time t_1 and a constant velocity V_1, the isotherms are depressed a given distance in the cold descending slab (Fig. 1a). A change in plate motion at time t_2 results in a reduction in convergence velocity ($V_2<V_1$); and the isotherms begin migrating up the slab (Fig. 1b).

The application of this model to kimberlitic magmatism requires that fluids can be retained in the slab when it is subducted to these great depths. Several lines of evidence support this requirement. Staudigel and King (1992) used thermal modeling to suggest that cold slab temperatures combined with fast subduction velocities (>12 cm yr^{-1}) will allow dense hydrous magnesian silicates (DHMS) to remain stable in the mantle well past the depth where subduction-related magmatism is generated. Based on experimental and theoretical evidence, Bose and Ganguly (1995) have similarly proposed that the subduction of old oceanic lithosphere (~>50 Ma) can result in the partial conversion of antigorite to a DHMS (phase 'A'), without loss of fluid, which is then carried deep into the mantle. Another line of evidence is the preservation of fluid inclusions in diamonds, which include both H_2O- and CO_2-rich varieties (Navon *et al.*, 1988; Guthrie *et al.*, 1991; Schrauder and Navon, 1993, 1994). At a constant velocity, the slab reaches some critical point where temperature is sufficiently high to release entrapped fluids and trigger kimberlitic magmatism (K1; Fig. 1b). When velocity is reduced, heat migrates up the slab, releasing these fluids which in turn trigger a swath of mantle magmatism that becomes progressively younger from right to left (K_2, K_3, Fig. 1b).

3. TEMPORAL-SPATIAL PATTERNS AND DEEP SUBDUCTION

3.1 Southern Africa

Some kimberlites in southern Africa date back as far as 1600 Ma and have no clear temporal pattern, due mainly to the small number of occurrences (Skinner, 1989). For those kimberlites less than 250 Ma, it has been recognized that some spatial-temporal trends in kimberlitic magmatism exist (Fig. 2; Skinner, 1989). The oldest kimberlites are generally found in the east (e.g. Dokolwayo, Elandskloof; 165-200 Ma), becoming progressively younger in central southern Africa (e.g. Swartruggens, Mzongwana; 165 Ma), eventually ending up with the Sutherland (75 Ma) and Gibeon (60 Ma) provinces in the west (Fig. 2b; Skinner, 1989; Gurney *et al.*, 1991).

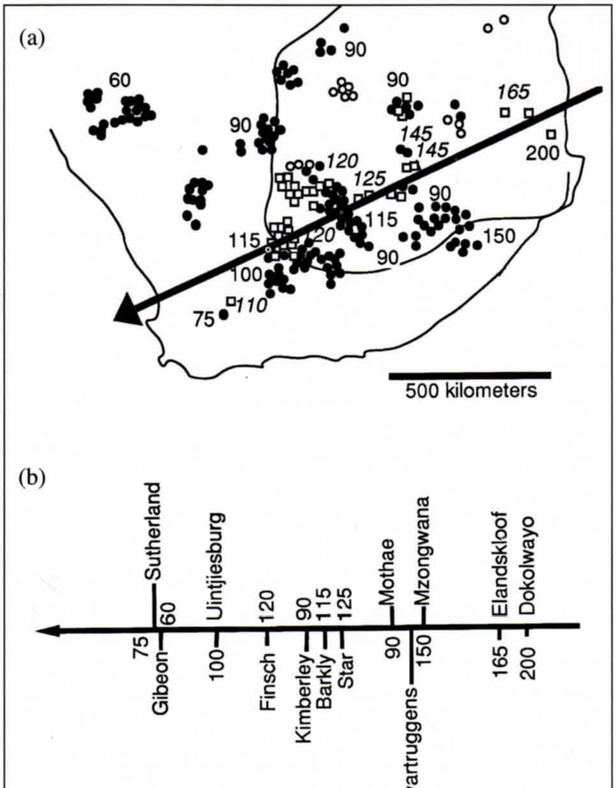

Figure 2. (a) Age distribution for kimberlites in southern Africa, given in millions of years (Ma). Squares denote Group II kimberlites, circles are Group I. **(b)** The vector determined in (a), with better known kimberlites along the westward-younging trajectory (Data from Skinner, 1989; Gurney *et al.*, 1991; Helmstaedt and Gurney, 1984; 1997).

Applying the proposed model to southern Africa, prior to 140 Ma, active subduction off the west coast of Gondwana (de Wit, 1977) placed oceanic lithosphere far beneath the continent (Fig. 3a; Helmstaedt and Gurney, 1984). During this period, kimberlites are restricted to south central Gondwana, where the subducted oceanic lithosphere is at the point where the necessary temperature is reached to release the fluids for kimberlitic magmatism. Rifting of the south Atlantic at ~130 Ma prevents further subduction beneath southern Africa (Fig. 3b). The convergence velocity between eastern Gondwana and the subducted proto-Pacific plate drops to zero, and heat begins to migrate up the foundered oceanic lithosphere from its deepest (hottest) end. Volatiles are subsequently driven off, triggering a westward migration of kimberlitic magmatism (Fig. 3b).

Note from Fig. 2 that the westward-younging trend is not a perfectly linear progression. In particular, the ~90 Ma kimberlites appear to be largely in the central part of the trend, though none are found in either in the furthest east or furthest west reaches of kimberlite magmatism as it is presently known (Fig. 2). An imperfect pattern is not surprising, given the heterogeneities in age and composition for the continental lithosphere in this region (Huang *et al.*, 1995; Doucoure *et al.*, 1996). Heterogeneities may have also existed in the subducted oceanic lithosphere, due to age and degree of alteration, that can affect the amount of fluid release (Staudigel and King, 1992). It is possible that, when a segment of oceanic lithosphere is no longer being subducted, a given portion is heated to the temperature at which fluids are released and repeated episodes of magmatism occur over time, depending on the amount of fluid present in the slab. Regardless of these variables, the westward-younging trend in southern Africa continues to hold, even in the presence of new data (Ayres *et al.*, 1998).

3.2 North America

Volume and area considerations require that enormous amounts of oceanic lithosphere have been subducted beneath North America in the past 200 Ma (Henderson *et al.*, 1984; Jurdy, 1984; Cox *et al.*, 1989; Engebretson *et al.*, 1992). Although

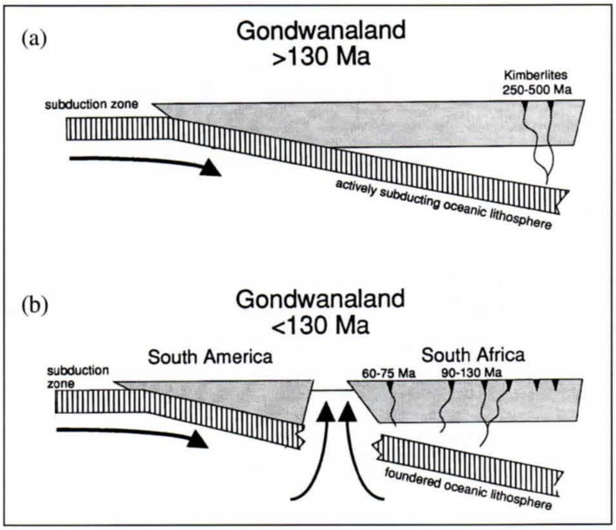

Figure 3. Cartoon depicting subduction of oceanic lithosphere beneath southern Africa. **(a)** Before 130 Ma, kimberlites are restricted mainly to the eastern part of Gondwana. **(b)** Opening of the south Atlantic at ~130 Ma leaves foundered oceanic lithosphere beneath southern Africa, which begins to heat up from right to left, triggering westward-younging kimberlitic magmatism at the surface.

dated kimberlites are less abundant, and the convergence between the Farallon, Kula and North American plates has varied considerably, some temporal-spatial patterns can be recognised. From 175-125 Ma, the Farallon Plate was subducted in an eastern to southeastern direction, with velocity decreasing by a factor of two (Fig. 4a; Cox *et al.,* 1989). Kimberlites emplaced during this period of convergence are located along the easternmost region of the continent (Quebec, Ontario, Michigan, ~150 Ma; Fig. 5). The convergence then rotates northward and nearly doubles in velocity between 125 and 75 Ma. Widespread kimberlitic magmatism heralds the onset of the Laramide orogeny (~90-50 Ma), reaching far to the north (Somerset Island, Slave Province, Alberta, Saskatchewan) and east (Arkansas, Kansas; Fig. 5). The best documented change is the dramatic decrease in velocity from 125 to 25 Ma, eventually stopping when the subduction zone is converted to a transform fault along the central west coast of North America (Fig. 4c). Heat begins to migrate rapidly up the Farallon Plate from its deepest end, and a regional southwest-younging trend of kimberlitic magmatism ensues, culminating in lamproitic magmatism in the southern Wyoming craton (Leucite Hills; 1-3 Ma; Fig. 5).

As with the southern African kimberlites, heterogeneities in subducted oceanic lithosphere and overriding continental lithosphere contribute to imperfections in the magmatic trend. In the North American scenario, an additional complication is the variability in convergence rate and direction over the past ~175 Myrs. It is evident, however, that from 175 to 25 Ma, the dominant trends in convergence were NE-SW convergence with a dramatic reduction in velocity during the latter part of this period (Fig. 4). The net effect of this greatly reduced convergence rate was a migration of younger kimberlitic magmatism to the southwest (Fig. 5).

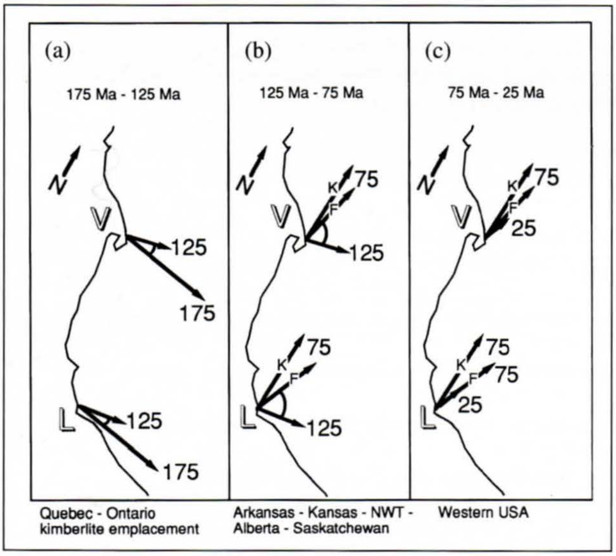

Figure 4. Convergence velocity vectors for the Farallon (F) and Kula (K) plates with the North American plate, measured at present-day Vancouver (V) and Los Angeles (L). Ages in Ma are shown at the tip of each vector. Kimberlitic magmatism associated with each interval are listed at the bottom of each panel. **(a)** 175-125 Ma, convergence is ESE with a reduction in velocity at 125 Ma. **(b)** 125-75 Ma, convergence rotates NNE and increases. **(c)** 75-25 Ma, direction is unchanged but velocity drops to less than half (Data from Cox *et al.,* 1989).

4. HOT SPOTS AND KIMBERLITIC MAGMATISM

Geochemical similarities between kimberlites and hotspot magmas have led many to suggest that the latter drove kimberlite magmatism (Crough *et al.,* 1980; Le Roex, 1986; Haggerty, 1994). It has been fully demonstrated that no presently known hotspot tracks correlate with the temporal-spatial patterns of kimberlites in southern Africa or in North America (Mitchell, 1986; Helmstaedt and Gurney, 1997). In addition to the spatial-temporal inconsistencies, another complication is the magnitude of hot spot magmatism. A rough comparison of the relative dimensions of the Hawaiian hotspot and southern African kimberlites demonstrates that hotspots are significant geological features on the ocean floor (Fig. 6). The annual output of magma at Hawaii is estimated at between 0.01 and 0.10 km^3 (McBirney, 1979; Clague and Dalrymple, 1987; Dzurisin *et al.,* 1984). Assuming a hotspot such as Hawaii had passed under southern Africa for 90 million years, between 1 x 10^6 and 10 x 10^6 km^3 of magma would have been produced. For comparison, making the generous assumption that there are 2000 kimberlite occurrences in southern Africa, all cylindrical in shape, 1 km in diameter and 3 km in depth, about 9000 km^3 of magma would be represented, which is less than 1 % of a Hawaiian hotspot output. If it is expected that a hotspot is a magmatic point source, this point source must produce a westward-younging, magmatic swath 1000 km wide and 2000 km long (Fig. 2), using less than 1 % of

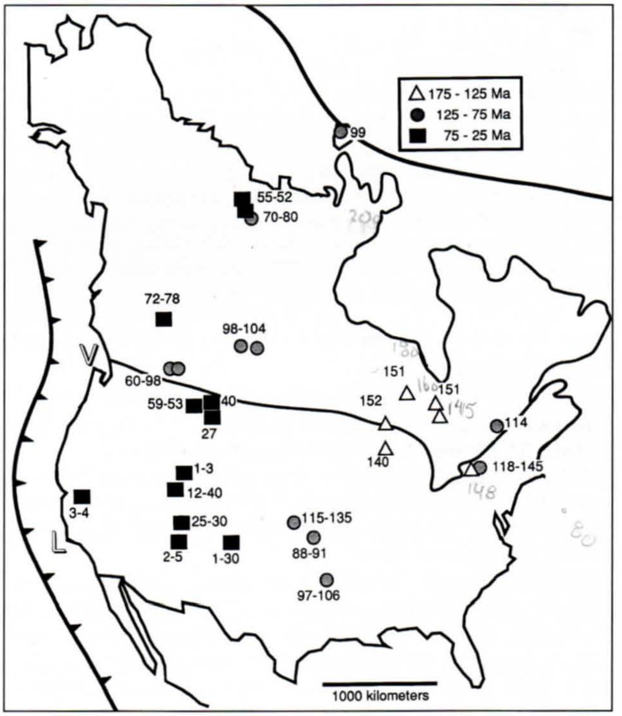

Figure 5. Distribution of kimberlitic magmatism in North America for 175-125 Ma (triangles), 125-75 Ma (circles), and 75-25 Ma (squares). Subduction zone is approximated by the hatchured line along the west coast, with present-day Vancouver (V) and Los Angeles (L) labeled for reference. The heavy black line near the legend approximates the position at 25 Ma, for oceanic lithosphere that was at the subduction zone 175 Ma ago. Subducted oceanic lithosphere at this point would be at approximately 2000 km depth (Data from Henderson *et al.,* 1984; Jurdy, 1984; Cox *et al.,* 1989; Fipke *et al.,* 1995; Carmichael *et al.,* 1997; Grand et al,. 1997; Leckie *et al.,* 1997a,b; McKinlay *et al.,* 1997; Carlson *et al.,* 1998).

its magma output. On both spatial-temporal and volumetric considerations, hotspots are very unlikely to account for kimberlite magmatism (or most other large magmatic features; see Anderson, 1997).

5. CONCLUSIONS

The most favourable evidence in favor of deep-seated subduction is the recognition of the subducted Farallon Plate beneath North America. The slab extends nearly 2700 km into the earth, reaches past the east coast of the United States, and has a possible thickness of from 60 to 600 kilometers (Grand *et al.,* 1997). If it is assumed that the geophysical feature has a tabular form, with a planar surface area of 3000 x 3000 km, then 0.5-5.0 x 10^9 km^3 of oceanic lithosphere is present beneath North America. Average oceanic lithosphere is ~60 km thick, so 1-10 oceanic lithospheres are represented. Hydrothermal alteration of oceanic crust has been documented to about 6 km depth (Staudigel and King, 1992), which would be about 10 % of the total volume of the preserved Farallon Plate. If only 1 vol% H_2O is present in this altered oceanic lithosphere, then about 0.01-0.1 vol% H_2O km^{-1} is present in the subducted Farallon Plate. A total volume of 0.5-5 x 10^6 km^3 of H_2O may thus be present in the subducted Farallon Plate. It is difficult to envision how this enormous, widely distributed volume of water could not contribute to mantle-derived, intraplate magmatism.

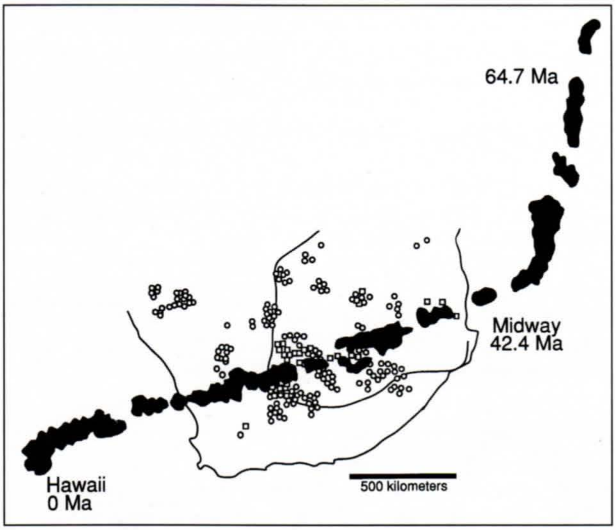

Figure 6. Comparison of kimberlitic magmatism (open symbols) in southern Africa and the Hawaiian hotspot track (black), drawn at the same scale. Hawaii is inverted along a vertical axis to approximate the westward-younging trend of southern African kimberlites, with present-day Hawaii at the extreme left and ages for selected islands in Ma. Volume considerations require a Hawaiian hotspot to produce the westward-younging swath of kimberlitic magmatism using less than 1% of its output (see text for discussion).

Kimberlitic magmatism is thus attributed to deep-seated subduction, and temporal-spatial patterns can be linked with changes in convergence velocity between oceanic and continental lithospheric plates. Over 25 years ago, calc-alkaline magmatism at the *shallow* end of convergent margins was recognised as the 'cause and effect' for subduction of oceanic lithosphere (Sharp, 1974), but the processes that drive this cause and effect are still poorly understood (Hildreth and Moorbath, 1988). By analogy, it is suggested here that a 'cause and effect' relationship may exist between kimberlitic magmatism and subduction at the *deep* end of convergent margins. There is already evidence that kimberlites in northern North America are sourced deep in the mantle (>670 km; Davies *et al.,* 1998). In time, the details of the subduction processes responsible for this relationship will eventually be discerned.

ACKNOWLEDGEMENTS

Encouragement from colleagues George E. Gehrels, Herb H. Helmstaedt, and Erich U. Petersen prompted the organization of these ideas into a final form. However, the author accepts full responsibility for content.

REFERENCES

ANDERSON D.L., 1997. The mythology of plumes (abstract). Geol. Soc. America, Abst. with Progs., **29,** A-166.

AYERS N.P., QUADLING K.E. & SMITH C.B., 1988. *Update on the distribution in time and space of southern African kimberlites (map).* DeBeers Geoscience Centre, Johannesburg, South Africa.

BOSE K. & GANGULY J., 1995. Experimental and theoretical studies of the stabilities of talc, antigorite, and phase A at high pressures with applications to subduction processes: *Earth Planet. Sci. Lett.,* **136,** pp. 109-121.

CARLSON S.M., HILLIER W.D., HOOD C.T., PRYDE R.P. & SKELTON D.N., 1998. *The Buffalo Hills kimberlite Province, north-central Alberta, Canada. (this volume).*

CARMICHAEL I.S.E., LANGE R.A. & HALL C., 1997. The duration of the Leucite Hills volcanism and observations on the eruption rate and intensive variables of the magmas (abstract). *Geol. Soc. America Abst. Prog.* **29,** A-164.

CLAGUE D.A. & DALRYMPLE G.B., 1987. The Hawaiian-Emperor volcanic chain. U.S. Geol. Surv. Prof. Paper 1350. 54p.

COX A., DEBICHE M.G. & ENGEBRETSON D.C., 1989. *Terrane trajectories and plate interactions along continental margins in the north Pacific Basin:* In: Z. Ben-Avraham (Ed.) The Evolution of the Pacific Ocean Margins, pp.20-35, Oxford Press, New York.

CROUGH S.T., MORGAN W.J. & HARGRAVES R.B., 1980. Kimberlites: their relation to mantle hotspots. *Earth Planet. Sci. Lett.* **50,** pp. 260-268.

DAVIES R., GRIFFIN W.L., PEARSON N.J., ANDREW A.S., DOYLE B.J. & O'REILLY S.Y., 1998. *Diamonds from the deep: pipe DO-27,* Slave Craton, Canada *(this volume).*

DE WIT M.J., 1977. The evolution of the Scotia Arc as a key to the reconstruction of southwestern Gondwanaland. *Tectonophysics,* **37,** 53-81.

DOUCOURE C.M., DE WIT M.J. & MUSHAYANDEBVU M.F., 1996. Effective elastic thickness of the continental lithosphere in South Africa. *J. Geophy. Res. B.* **101,** pp. 11,291-11,303.

DZURISIN D., KOYANAGI R.Y. & ENGLISH T.T., 1984. Magma supply and storage at Kilauea volcano, Hawaii, 1956-1983. *J. Volcan. Geotherm. Res.* **21,** pp. 177-206.

ENGEBRETSON D.C., KELLY K.P., CASHMAN H.J. & RICHARDS M.A., 1992. 180 million years of subduction. *GSA Today* **2,** 93-95.

FIPKE C.F., GURNEY J.J. & MOORE R.O., 1995. Diamond exploration techniques emphasising indicator mineral geochemistry and Canadian examples. *Geol. Survey Canada Bull.* **423,** p.86.

GRAND S.P., VAN DER HILST R.D. & WIDIYANTORO S., 1997. Global seismic tomography: a snapshot of convection in the Earth: *GSA Today,* **7,** pp. 1-7.

GUTHRIE G.D., VEBLEN D.R., NAVON O. & ROSSMAN G.R., 1991. Submicrometer fluid inclusions in turbid-diamond coats. *Earth Planet. Sci. Lett.* **105,** pp.1-12.

GURNEY J.J., MOORE R.O., KIRKLEY M.B., OTTER M.L., HOPPS J.J. & MCCANDLESS T.E., 1991. Kimberlites of southern Africa: a review. In: A.B. Kampunzu and R.T. Lubala, eds., *Magmatism in Extensional Structural Settings - the Phanerozoic African Plate,* Chapter **14,** pp.495-536. Springer-Verlag, Berlin.

HAGGERTY S.E., 1994. Superkimberlites: a geodynamic window to the Earth's core. *Earth Planet. Sci. Lett.* **64,** pp.57-61.

HELMSTAEDT H.H. & DOIG R., 1975. Eclogite nodules from kimberlites of the Colorado Plateau: Samples of subducted Franciscan-type oceanic lithosphere: *Phys. Chem Earth* **9,** pp.95-111.

HELMSTAEDT H.H. & GURNEY J.J., 1984. *Kimberlites of southern Africa - are they related to subduction processes?*: In: J. Kornprobst (Ed.) Kimberlites and Related Rocks, pp.425-438, Elsevier, Netherlands.

HELMSTAEDT H.H. & GURNEY J.J., 1997. Geodynamic controls of kimberlites - what are the roles of hotspot and plate tectonics?: In: N.V. Sobolev and R.H. Mitchell (Eds.) 6th International Kimberlite Conference Volume 2, Diamonds: Characterization, Genesis and Exploration. *Russian Geology and Geophysics,* **38,** pp.394-404, Allerton Press, New York.

HENDERSON L.J., GORDON R.G. & ENGEBRETSON D.C., 1984. Mesozoic aseismic ridges on the Farallon Plate and southward migration of shallow subduction during the Laramide Orogeny. *Tectonics* **3,** pp. 121-132.

HILDRETH W. & MOORBATH S., 1988. Crustal contributions to arc magmatism in the Andes of central Chile. *Cont. Min. Petr.* **98,** pp. 499-508.

HUANG Y.M., VAN CALSTEREN P. & HAWKSEWORTH C.J., 1995. The evolution of the lithosphere in southern Africa: a perspective on the basic granulite xenoliths from kimberlites in South Africa. *Geochim. Cosmochim. Acta* **59,** pp. 4905-4920.

JURDY D.M., 1984. The subduction of the Farallon Plate beneath North America as derived from relative plate motions. *Tectonics* **3,** pp. 107-113.

LECKIE D.A., KJARSGAARD B.A., BLOCH J., MCINTYRE D., MCNEIL D., STASIUK L. & HEAMAN L., 1997. Emplacement and reworking of Cretaceous, diamond-bearing, crater facies kimberlite of central Saskatchewan, Canada. *Geol. Soc. America Bull.,* **109,** pp. 1000-1020.

LECKIE D.A. & KJAARSGAARD B., 1997. Geology of a late Cretaceous possible kimberlite at Mountain Lake, Alberta - chemistry, petrology, indicator minerals, aeromagnetic signature, age, stratigraphic position and setting. Geol. Survey Canada Open File Rep. 3441.

LE ROEX A.P., 1986. Geochemical correlation between southern African kimberlites and South Atlantic hotspots, *Nature,* **324,** pp. 243-245.

MCBIRNEY A.R., 1979. Volcanology. Freeman, Cooper and Co., San Francisco, CA, p. 397.

MCCANDLESS T.E., 1997. Diamond genesis and distribution through time: is there a pattern?: *Geol. Soc. America Abs. with Progs.,* **29,** p.A15.

MCKINLAY F.T., WILLIAMS A.C., KONG J. & SCOTT-SMITH B.H., 1997. An integrated exploration case history for diamonds, Hardy Lake Project, NWT. in, Gubins, A.G., ed., *Proceedings of Exploration 97: Fourth Decennial International Conference on Mineral Exploration,* 1029-1038.

MITCHELL R.H., 1986. Kinberlites: Mineralogy, geochemistry and petrology. Now York. Plenum Press. 442p.

NAVON O., HUTCHEON I.D., ROSSMAN G.R. & WASSERBURG G.J., 1988. Mantle-derived fluids in diamond micro-inclusions: *Nature,* **335,** p.784-789.

PEACOCK S.M., 1993. Large-scale hydration of the lithosphere above subducting slabs. *Chem. Geol.* **108,** pp. 49-59.

SCHRAUDER M. & NAVON O., 1993. Solid carbon dioxide in a natural diamond. *Nature* **365,** pp. 42-44.

SCHRAUDER M. & NAVON O., 1994. Hydrous and carbonatitic mantle fluids in fibrous diamonds from Jwaneng, Botswana: *Geochim. Cosmochim. Acta,* **58,** p.761-771.

SHARP W.E., 1974. A plate-tectonic origin for diamond-bearing kimberlites: *Earth. Planet.Sci. Lett.* **21,** pp. 351-355.

SKINNER E.M.W., 1989. Contrasting Group I and Group II kimberlite petrology: towards a genetic model for kimberlites. Kimberlites and Related Rocks, Vol.1, *Geol. Soc. Australia Sp. Pub.* **14,** p. 528.

SCHMIDT M.W. & STEFANO P., 1994. The stability of lawsonite and zoisite at high pressures: experiments in CASH to 92 kbar and implications for the presence of hydrous phases in subducted lithosphere. *Earth Planet. Sci. Lett.* **124,** pp. 105-118.

STAUDIGEL H. & KING S.D., 1992. Ultrafast subduction: the key to slab recycling efficiency and mantle differentiation. *Earth Planet. Sci. Lett.* **109,** 517-530.

TOKSÖZ M.N., 1975. *The subduction of lithosphere:* in Continents Adrift and Continents Aground, pp.113-122, Freeman & Co., San Francisco, California.